modelcollect

WWW.MODELCOLLECT.COM

# SOVIET 9P117 STRATEGIC MISSILE LAUNCHER SCUD SERIES

**Scud is the name of a series of tactical ballistic missiles developed by the Soviet Union during the Cold War. It was exported widely to both Second and Third World countries. The term comes from the NATO reporting name attached to the missile by Western intelligence agencies. The Russian names for the missile are the R-11 (the first version), and the R-17 (later R-300) Elbrus (later developments). The name Scud has been widely used to refer to these missiles and the wide variety of derivative variants developed in other countries based on the Soviet design.**

●READ BEFORE ASSEMBLY

1.When you use glue or paint, do not near flame,and use in a well-ventiated room.
2.Take extra care in handling phote etch parts in order to avoid injury
3.When you take parts off the runner frame, use modeling scissors and trim excess plastic with a cutter or a file.
4.Glue and paint are not included.
5.This product is only suitable for experienced more than 14 years old.

●装配之前仔细阅读:

1. 勿於近火处使用胶水或油漆，并 打开窗户保持空气流通。
2. 取蚀刻片时应特别注意安全，防止利边划伤手指。
3. 从胶架中取出部件时，应用模型专用剪，并用界刀或小锉除去多余的胶料。
4. 请使用塑料胶水和油漆，模型内不含。
5. 本产品不适合14岁以下没有经验的模型爱好者。

SUPERGLUE 强力胶 | WEIGHT 配重 | MAKE HOLE 钻孔 | CUT/REMOVE 切除 | BEND 弯曲 | FILE/SAND 锉平 | OPTION 选择 | NO CEMENT 不涂胶水 | DECAL 贴纸

DECAL APPLICATION

1.Cut off decal from sheet.
2.Dip the decal in tepid water 40° C for about 10 sec.and place on a clean cloth.
3.Hold the backing sheet edge and slide decal onto the model.
4.Move decal into position by wetting decal with finger.
5.Press decal gently down with a soft cloth until excess water and air bubbles are gone.

水贴纸的使用:

1. 从水贴纸上剪下印花。
2. 将印花放入温水中浸10秒，然后放在干净布上。
3. 拿着印花纸板将印花移到模型上。
4. 手指蘸水将印花移到适当的位置。
5. 用软布轻压印花直至不干，汽泡消失。

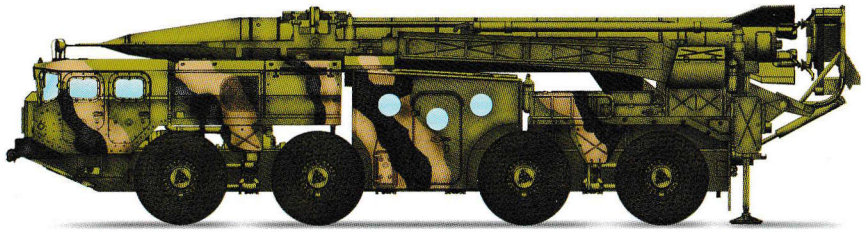

Scud - B early type

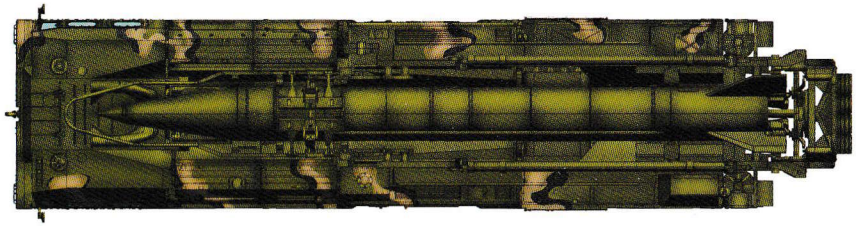

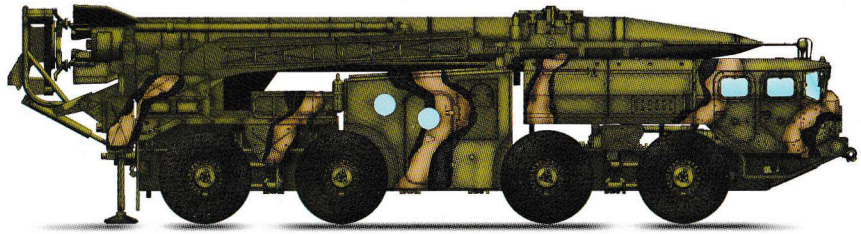

# SOVIET 9P117 STRATEGIC MISSILE LAUNCHER SCUD SERIES

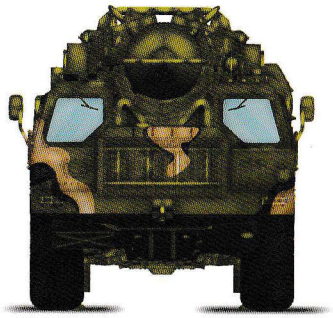

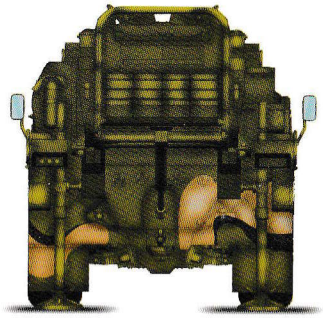

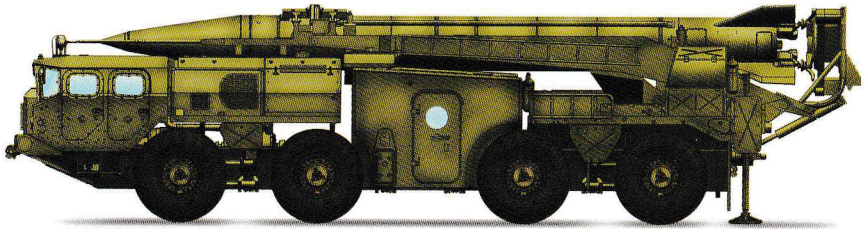

Scud - B

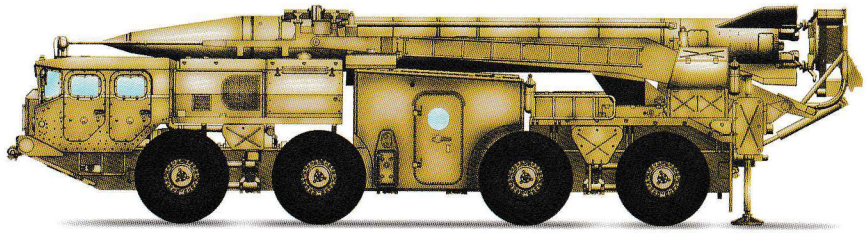

Scud - C

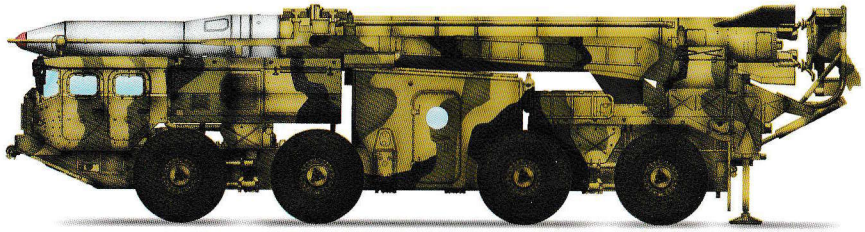

Scud - D

| | | | | | |
|---|---|---|---|---|---|
| A.MIG 033 Rubber & Tires | A.MIG 097 Crystal Orange | A.MIG 083 ZASHCHITNIY ZELENO | A.MIG 057 Yellow Grey | A.MIG 047 Satin White | A.MIG 0181 Steel |
| A.MIG 187 JET EXHAUST BURNT IRON | | | | | |

Parts

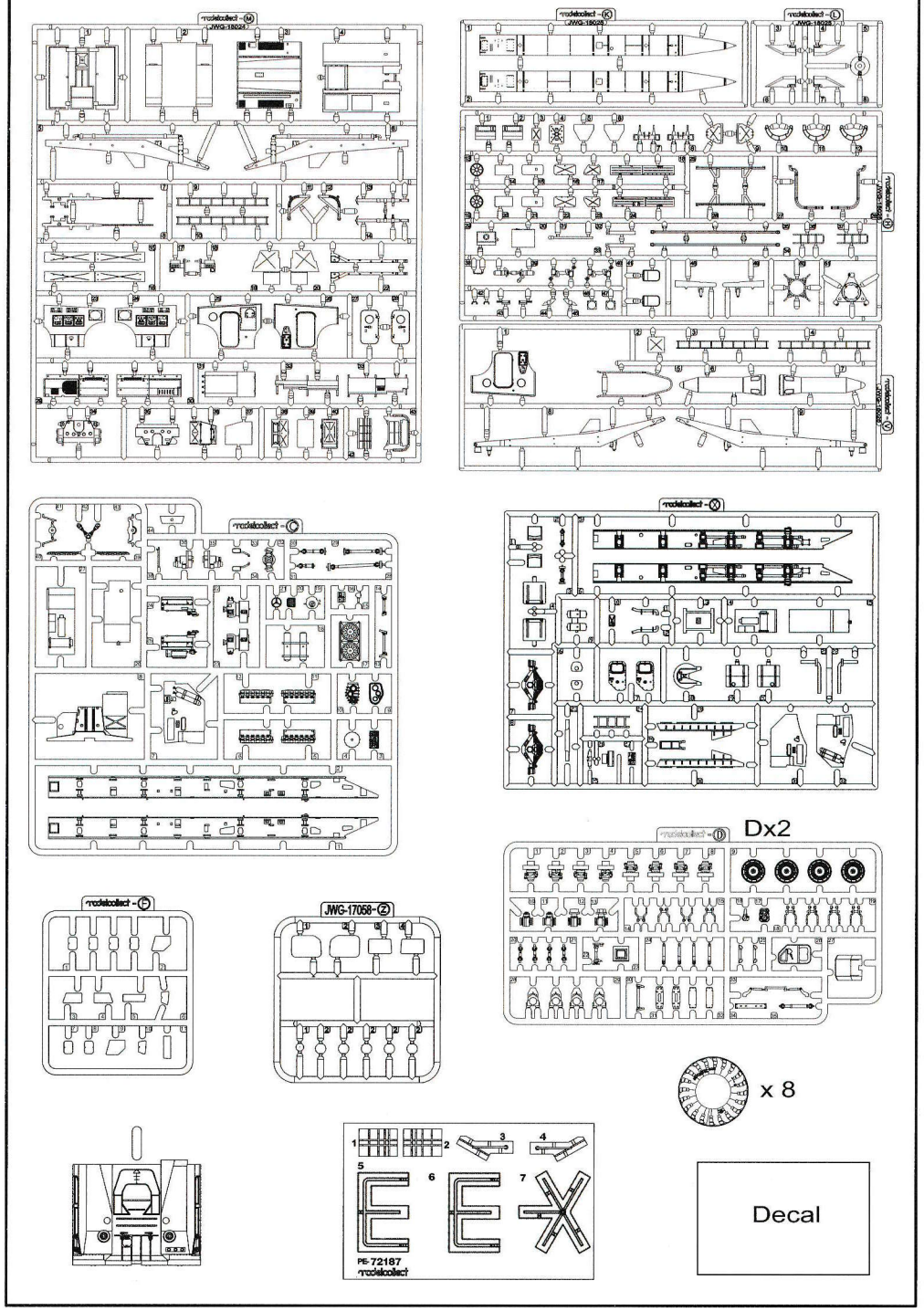

## 1
发动机及传动结构组装
发動機及傳動結構組裝
Attaching engine part and transmission system

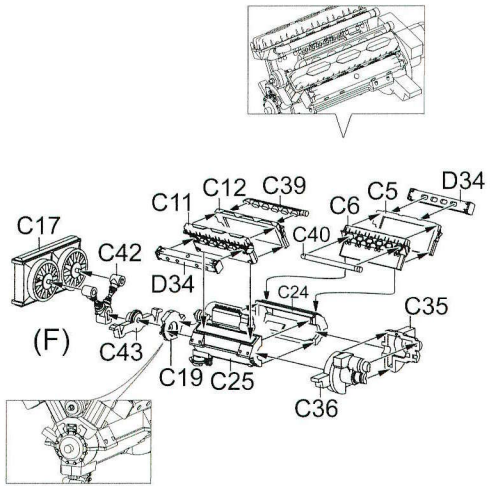


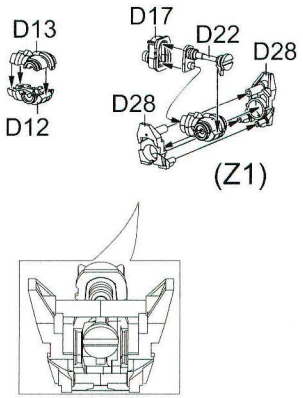


## 2
发动机及传动结构组装
發動機及傳動結構組裝
Attaching engine part and transmission system

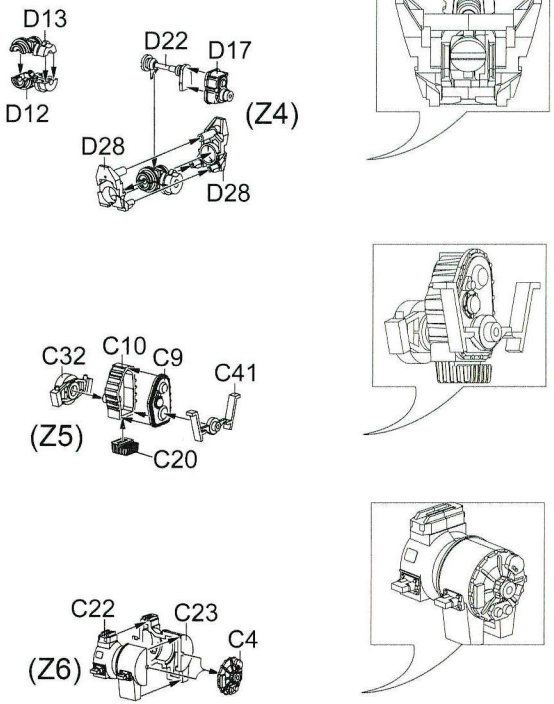


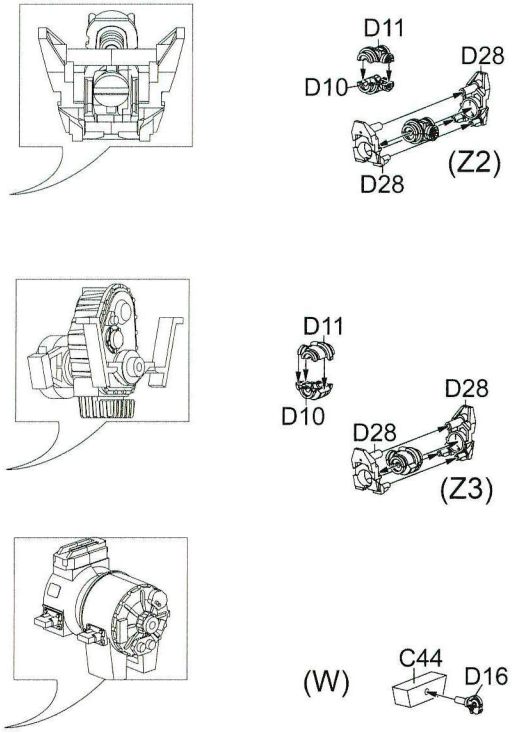




















## 3
车体大梁附件组装
車體大梁附件組裝
Attaching crossbeam detail part

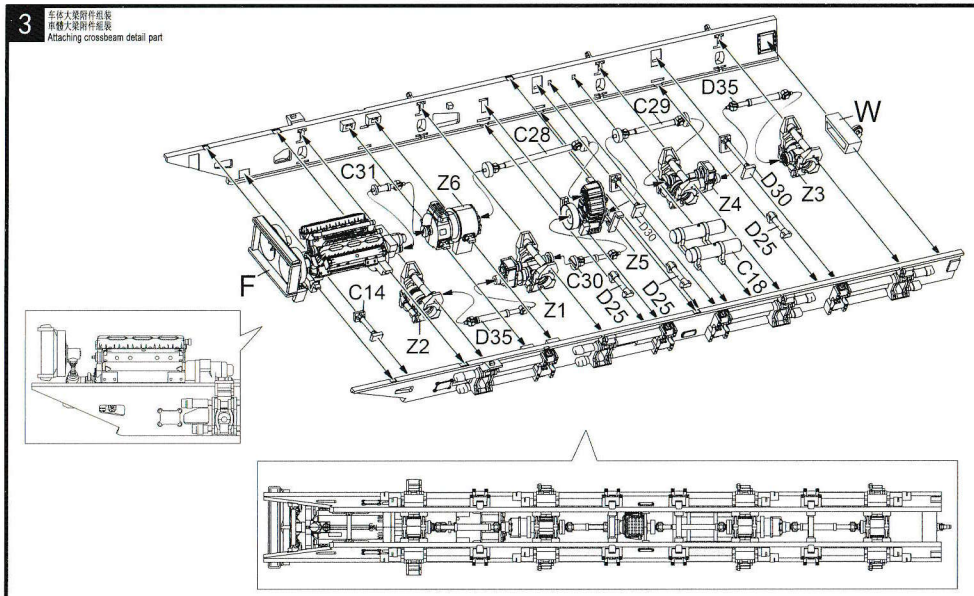


## 4
车体大梁及悬挂结构组装
車體大梁及懸掛結構組裝
Attaching crossbeam and suspension

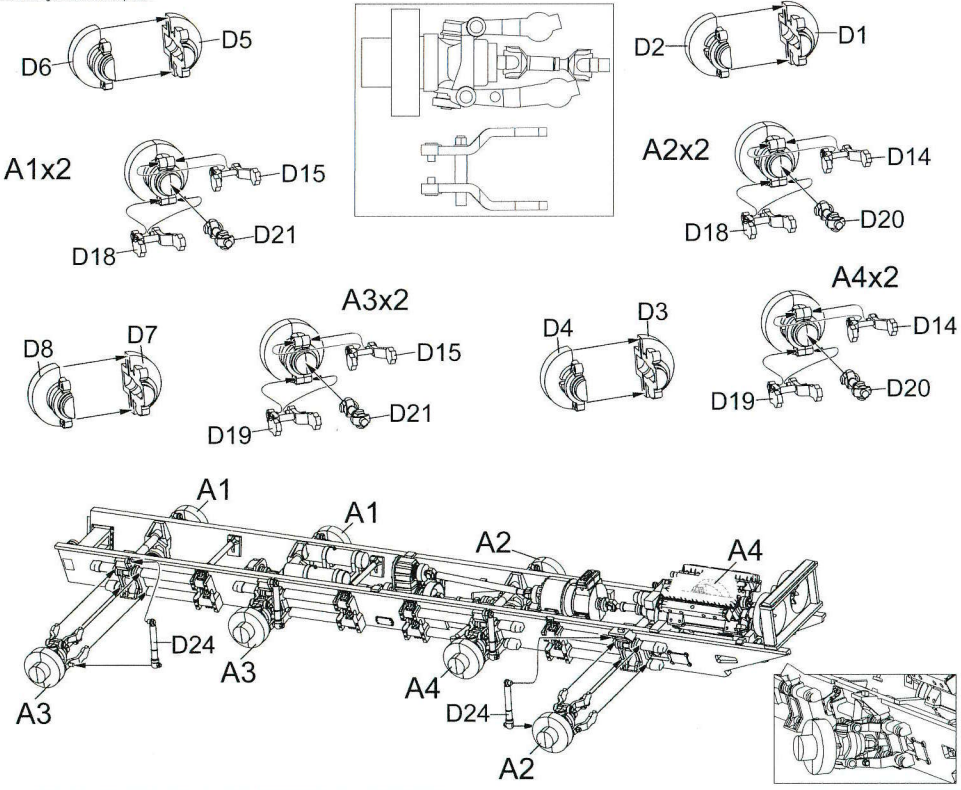

## 5 车体大梁附件组装 車體大梁附件組裝 Attaching crossbeam detail part

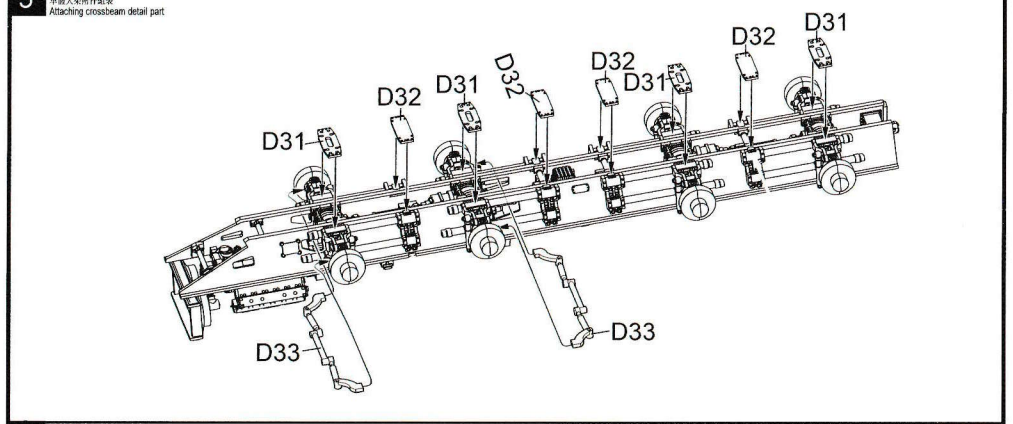


## 6 组装車輪 組裝車輪 Attaching wheels

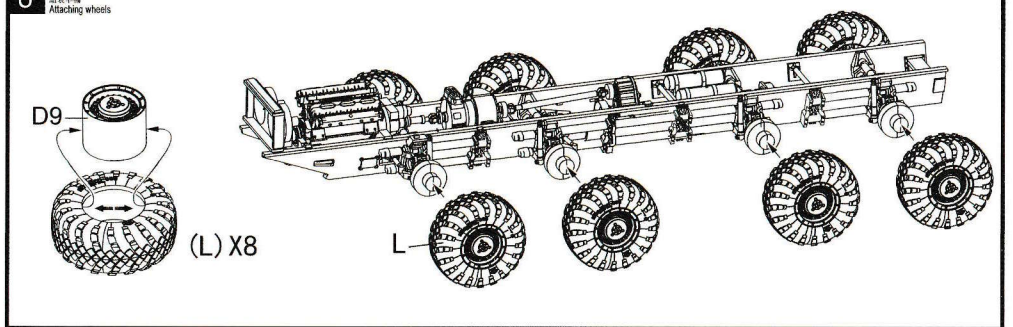


## 7 导弹控制室组装 導彈控制室組裝 Attaching the cabin

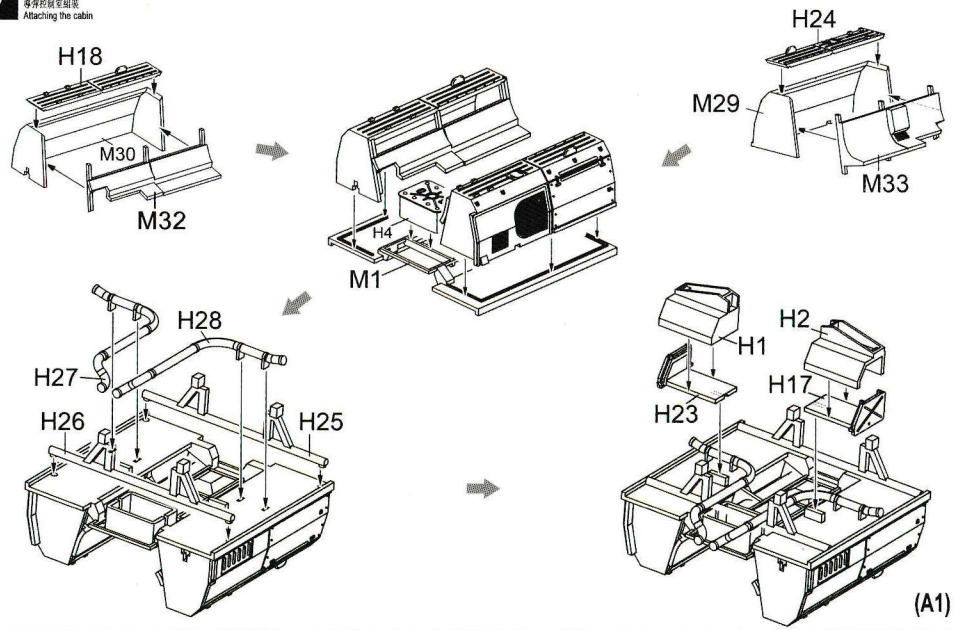


## 8 导弹控制室组装 導彈控制室組裝 Attaching the cabin

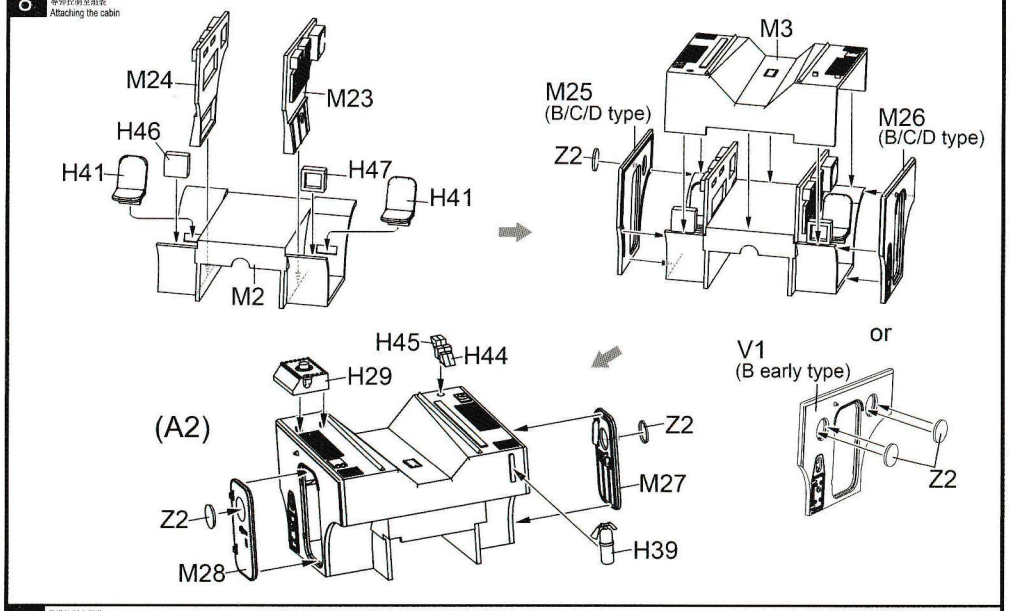


## 9 导弹控制室组装 導彈控制室組裝 Attaching the cabin

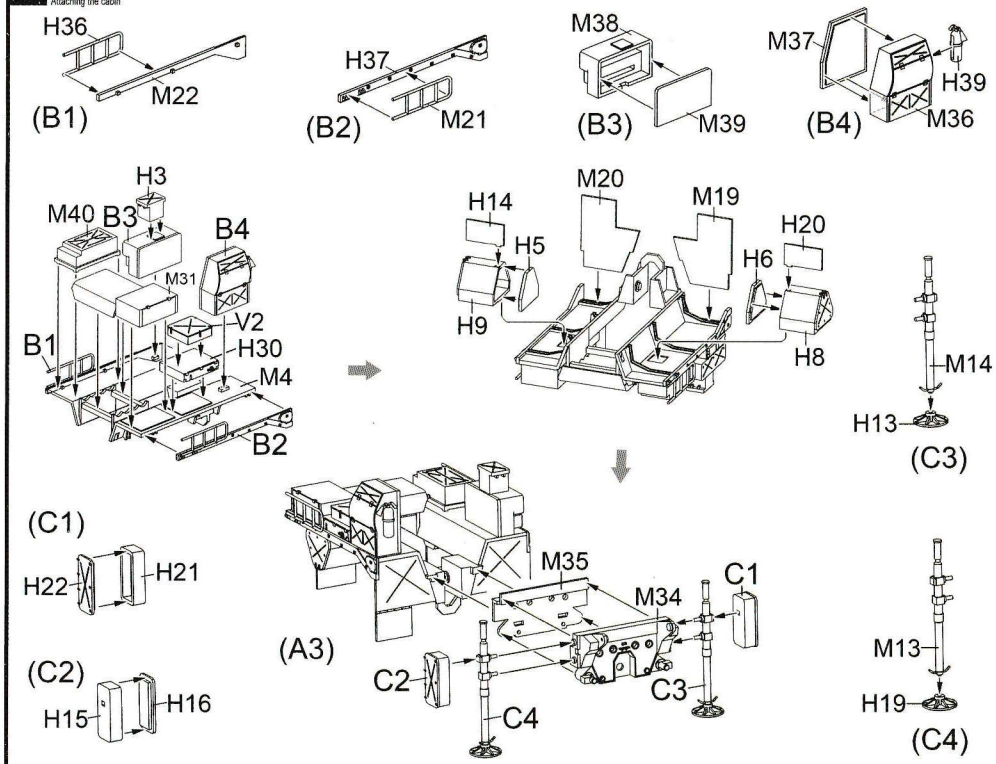

## 10 導彈控制室組裝 導彈控制室組裝 Attaching the cabin

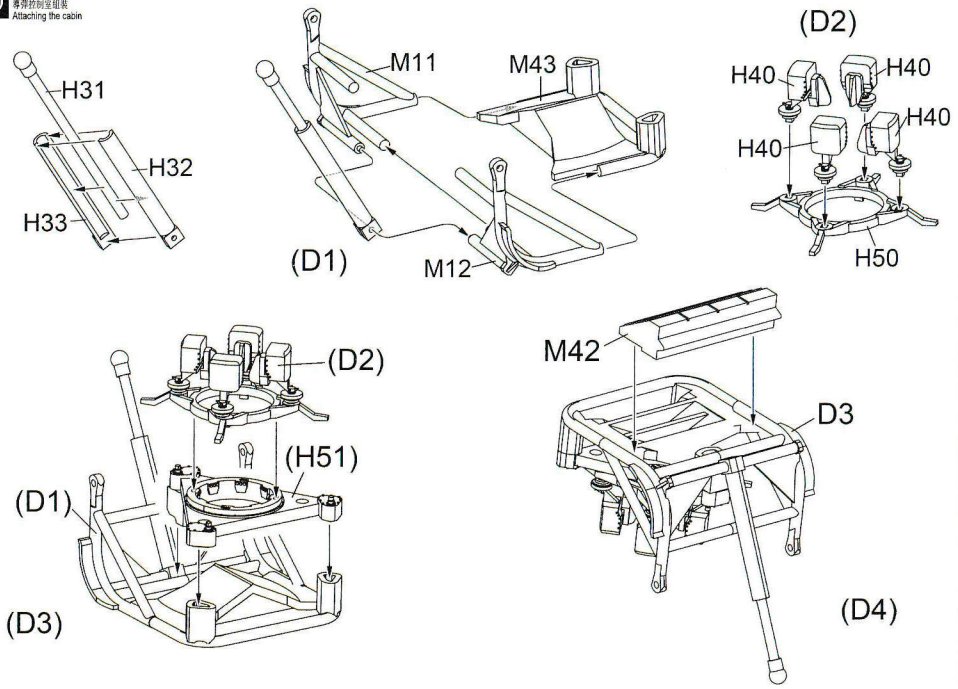


## 11 導彈控制室組裝 導彈控制室組裝 Attaching the cabin

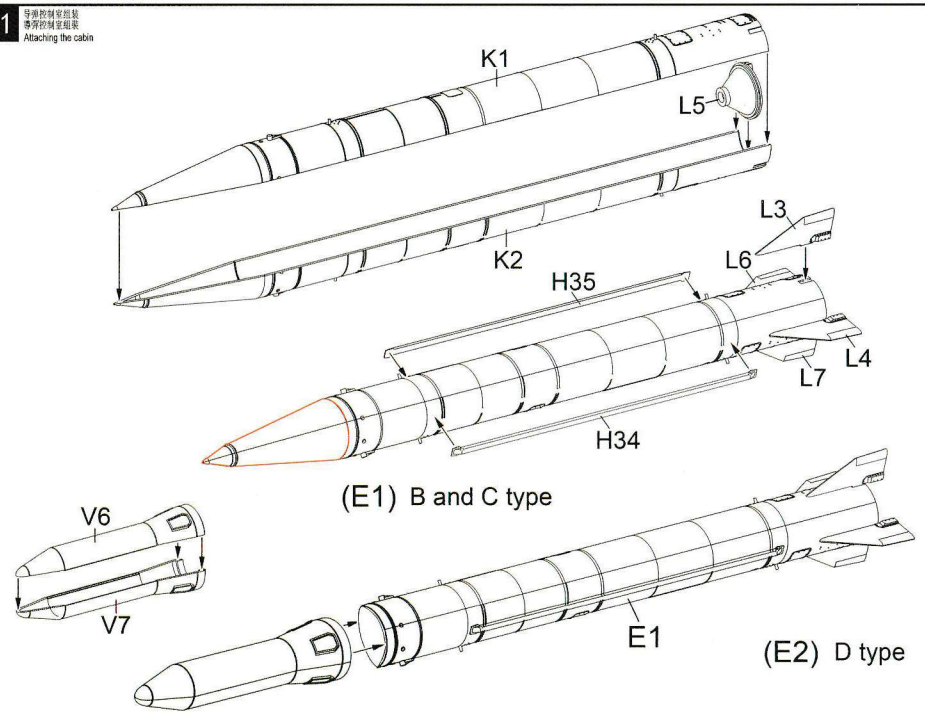


## 12 導彈控制室組裝 導彈控制室組裝 Attaching the cabin

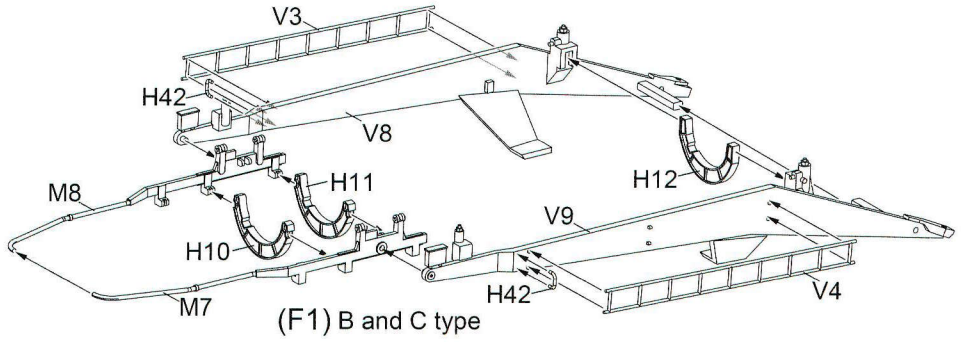


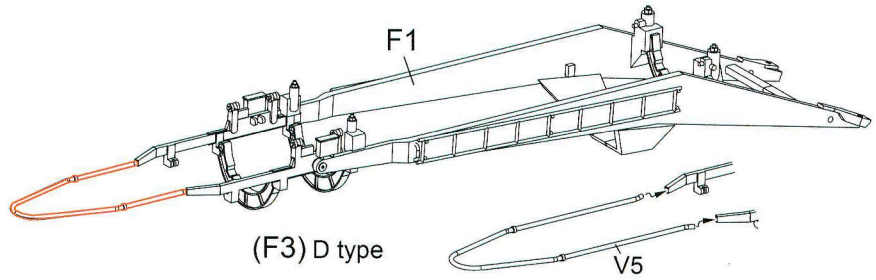


## 13 導彈控制室組裝 導彈控制室組裝 Attaching the cabin

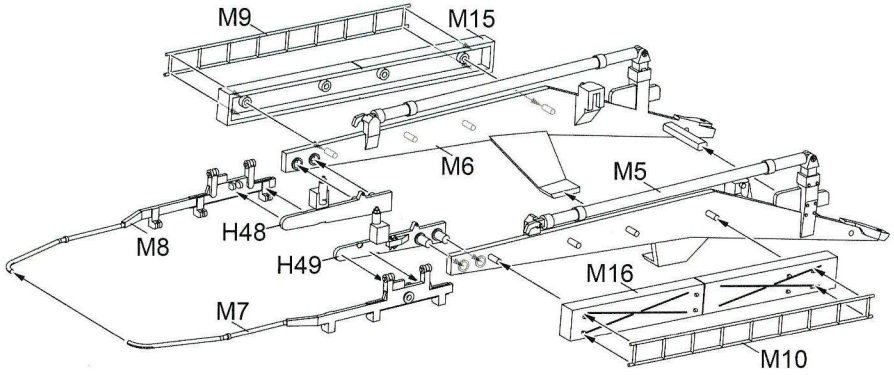

## 14 组装车厢与车体 组装串箱與車體 Attaching cabin and crossbeam

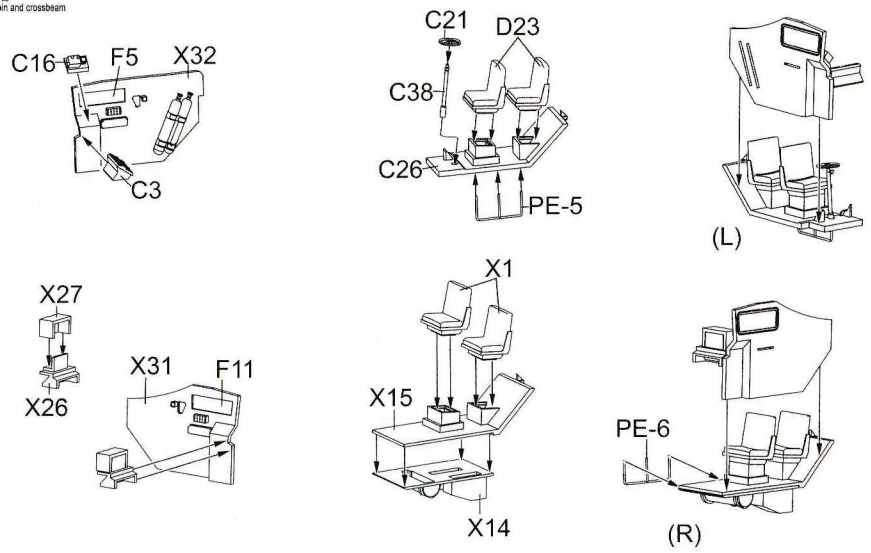


## 15 导弹控制室组装 导彈控制室組裝 Attaching the cabin

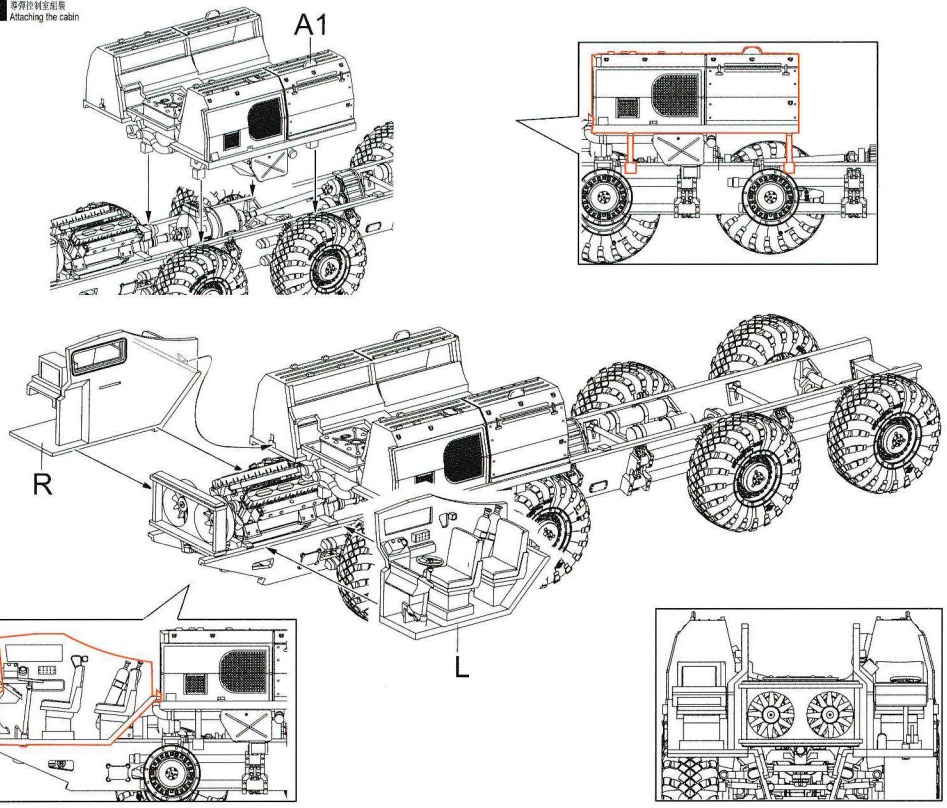


## 16 组装驾驶室外部 組裝駕駛室外部 Attaching cabin details

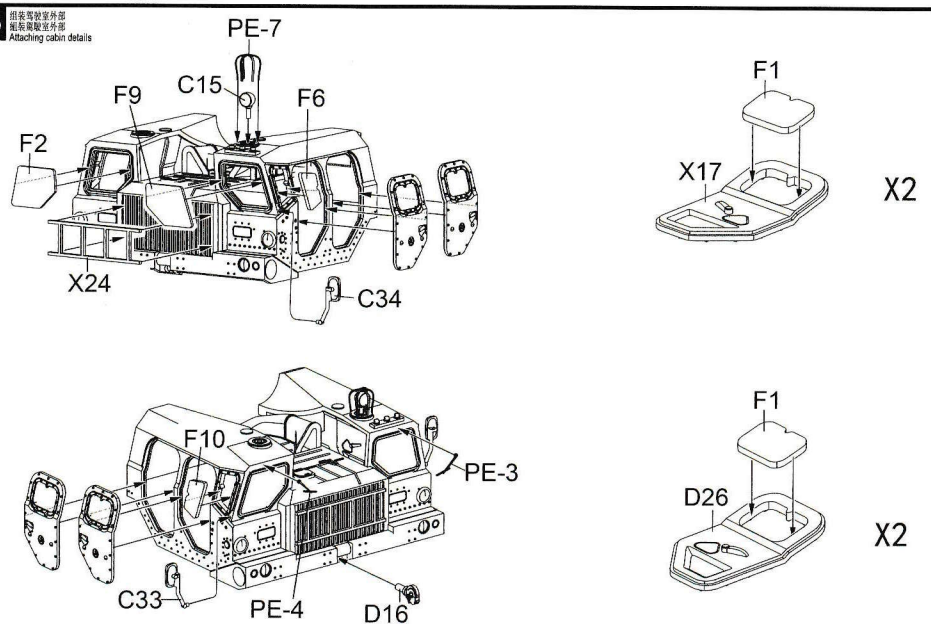


## 17 组装驾驶室与车体 組裝駕駛室與車體 Attaching cabin and crossbeam

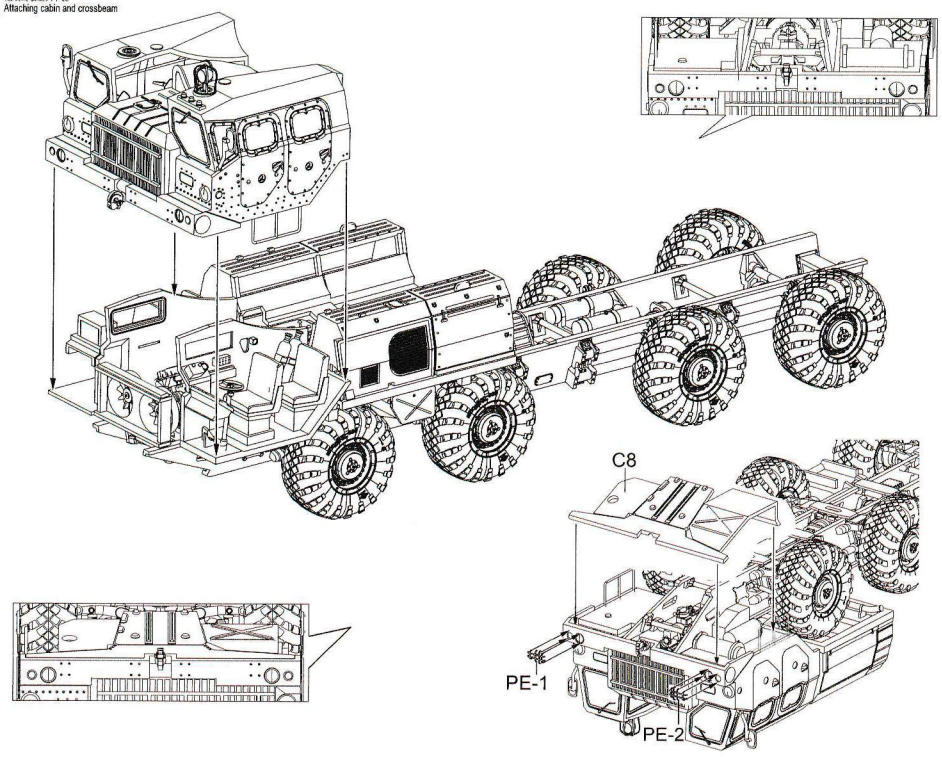

18 导弹控制室组装
導彈控制室組裝
Attaching the cabin

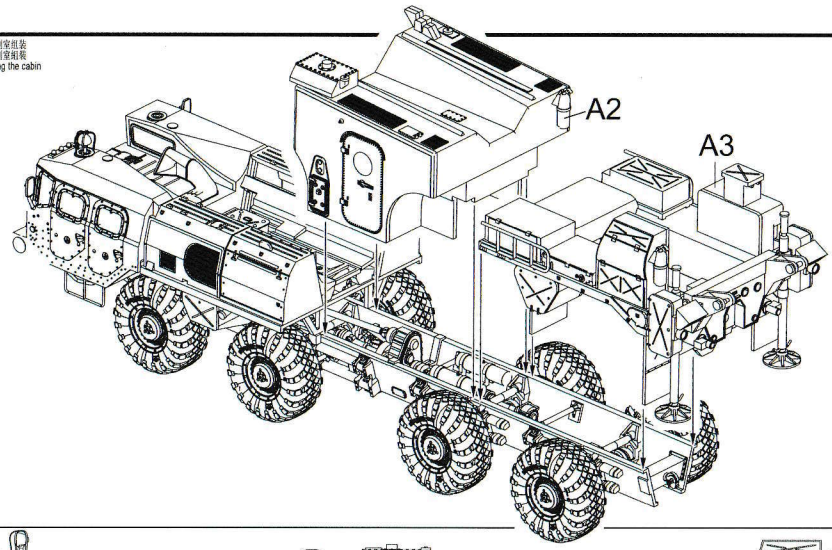


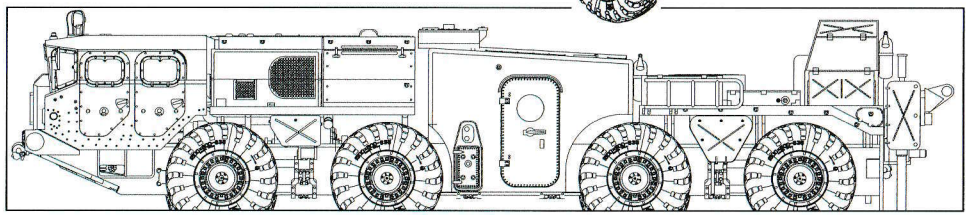
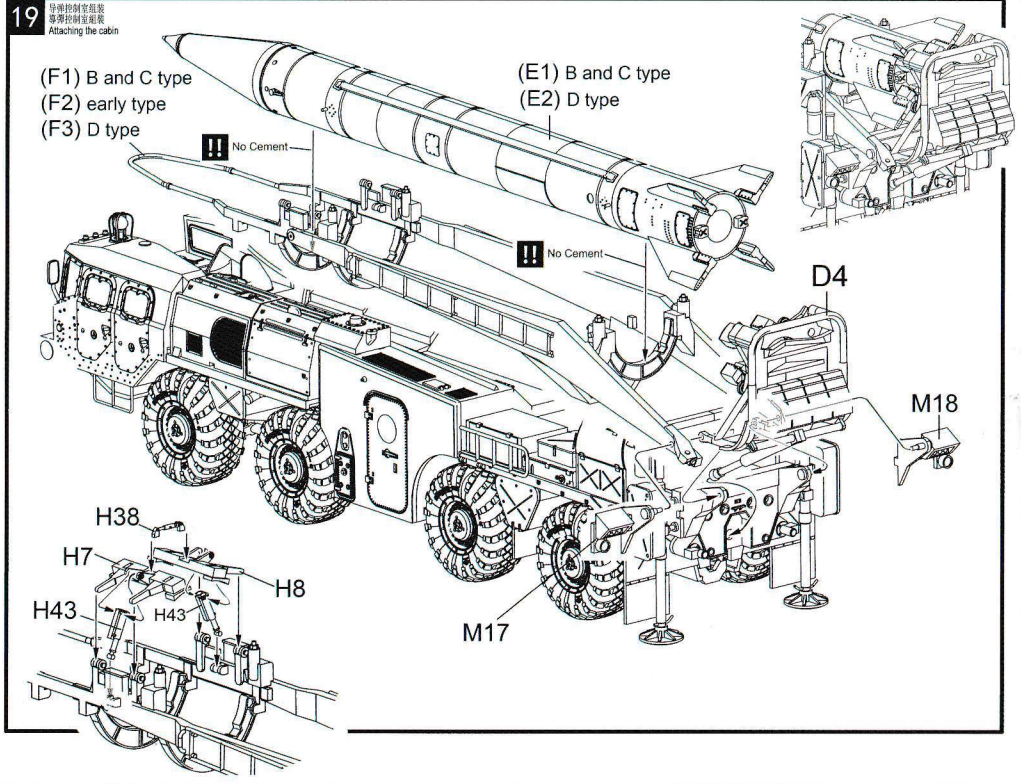
19 导弹控制室组装
導彈控制室組裝
Attaching the cabin